PUBLISHED: 30-MAR-2017
2017.0 DISCOVERY (LR), 307-01

AUTOMATIC TRANSMISSION/TRANSAXLE - VEHICLES WITH: 8HP45 8-SPEED AUTOMATIC TRANSMISSION AWD

TRANSMISSION - V6 S/C 3.0L PETROL

(G1977555)

INSTALLATION

44.20.01	GEARBOX - RENEW	3000 CC, AJ V6 (AJ126)	6.6	USED WITHINS	

INSTALLATION

SPECIAL TOOL(S)



303-021

303-021

Engine support bracket

transmissionmanuals.com



E53727

303-1069

Adapter, Wrench


E115255

303-1435

Engine Lifting Brackets Rear

transmissionmanuals.com

PART(S)

STEP	PART NAME	QUANTITY
Step 3	Transfer case connecting sleeve O-ring seal	1
Step 29	Torque converter bolts	1
Step 39	Oil cooler O-ring seals	1

CAUTION:

New transmission assemblies are supplied pre-filled with transmission fluid.

NOTE:

Some variation in the illustrations may occur, but the essential information is always correct.

All vehicles

1.

NOTE:

This step is only required if a new component is installed.

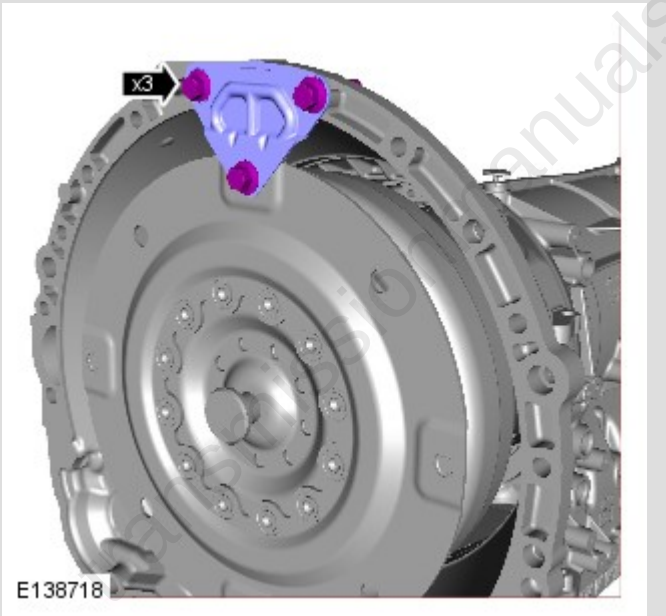

Remove the torque converter retainer.

carsmanuals.com

2.

NOTE:

Make sure that the torque converter is fully engaged to the transmission.

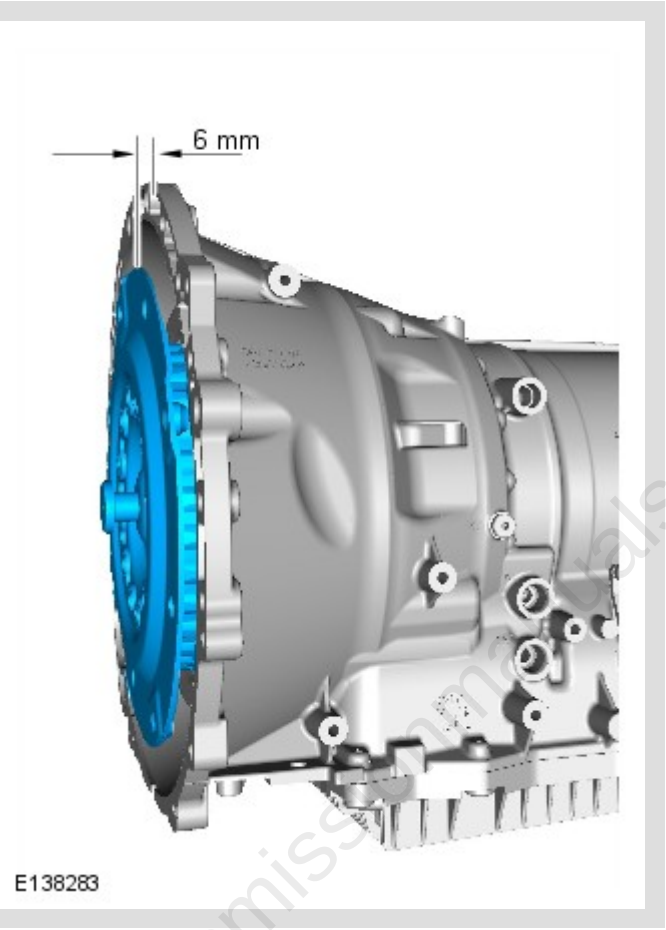

transmissionmanuals.com

3.

CAUTION:

Do not carry out this step if a new transfer box is to be installed.

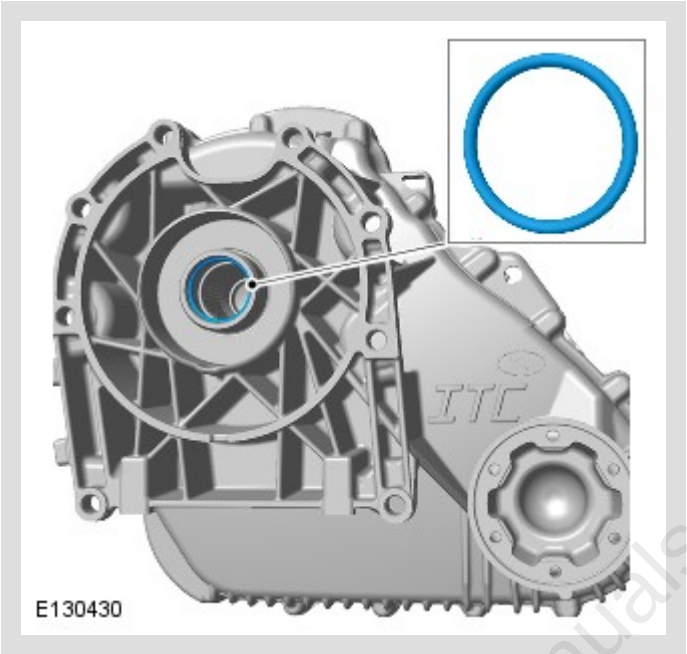

Install a new O-ring seal.

Renew Part: Transfer case connecting sleeve O-ring seal Quantity: 1 .

transmissionmanuals.com

4.

NOTE:

This step is only required if previously removed.

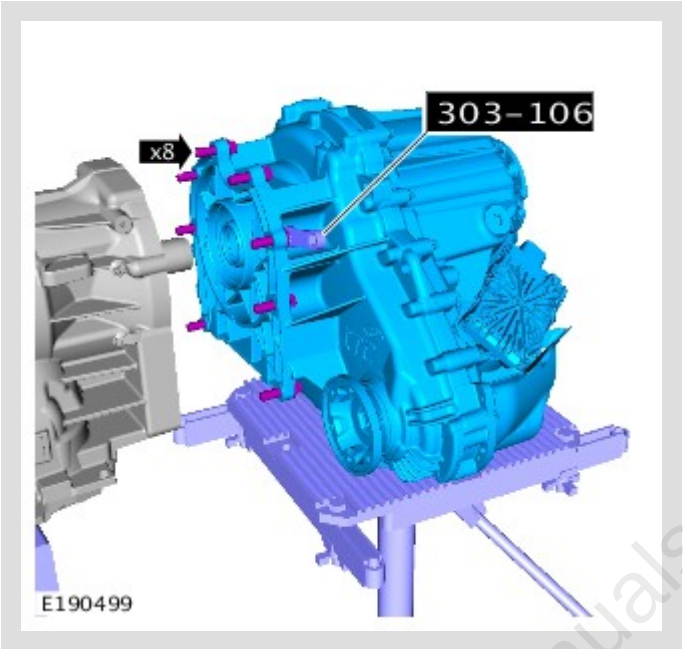

- Clean the component mating faces.
- Lubricate the input shaft splines with 'Weicon TL7391' grease.
  Special Tool(s): 303-1069
  Torque: **45 Nm**

Vehicles with single speed transfer case

transmissionmanuals.com

1.

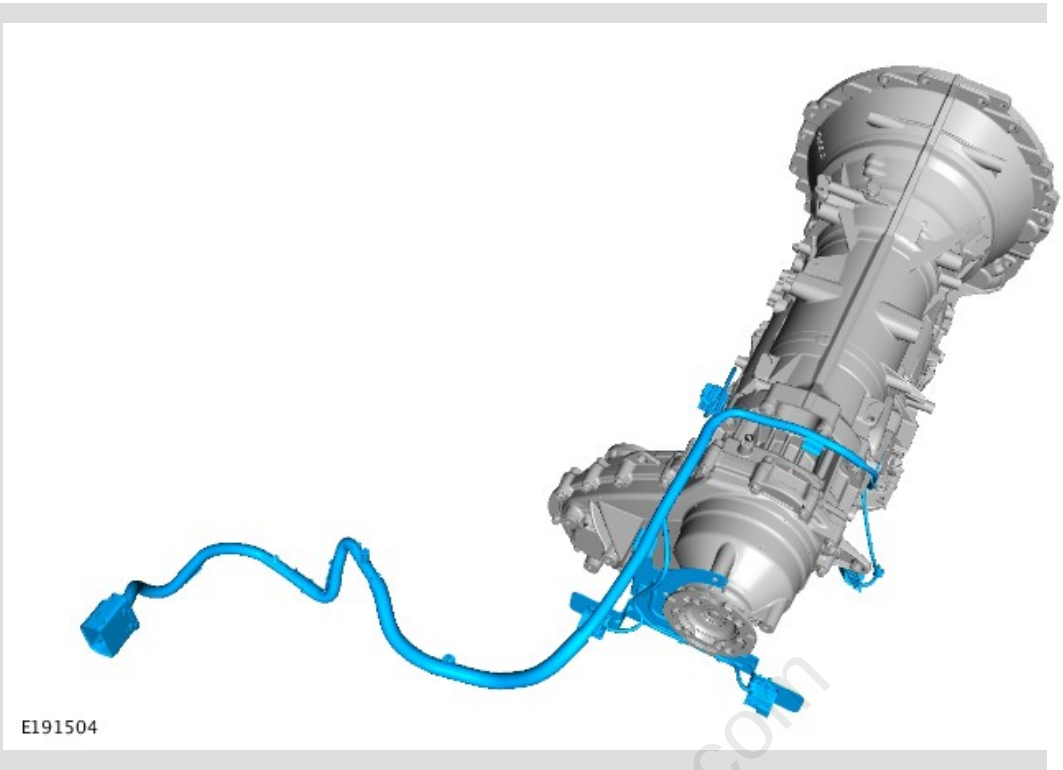

2.

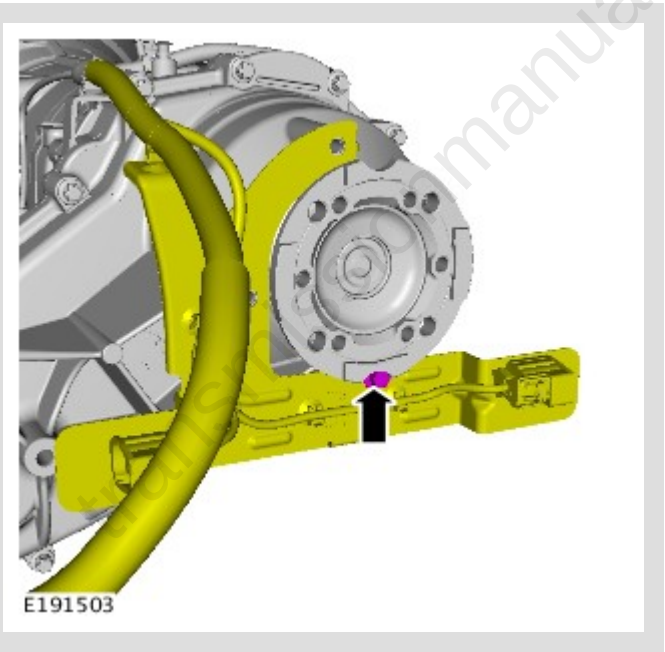

Torque: **25 Nm**

3.

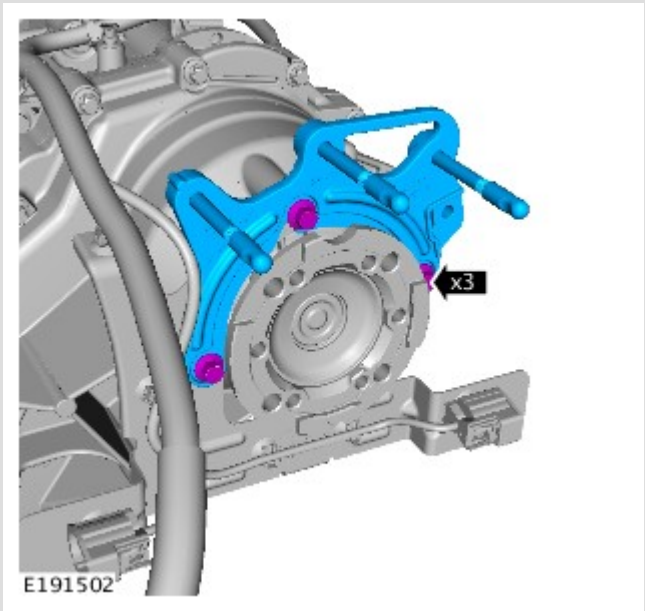

Torque: 25 Nm

4.

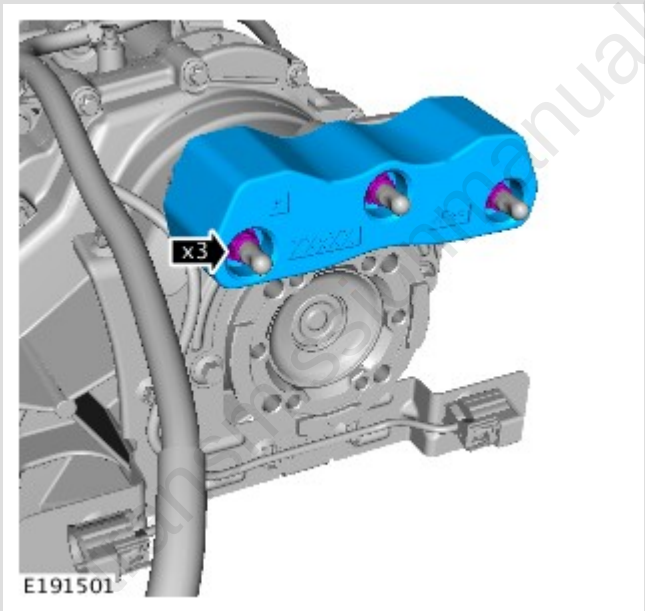

Torque: 18 Nm

	Vehicles with twin speed transfer case

manuals.com

1.

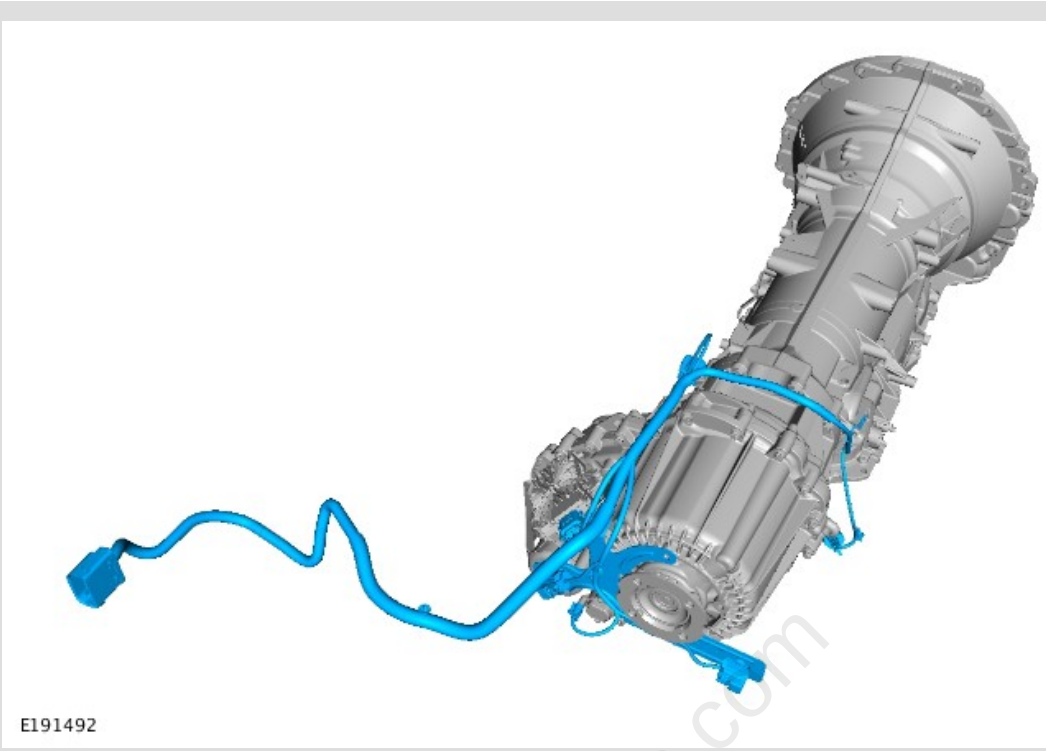

2.

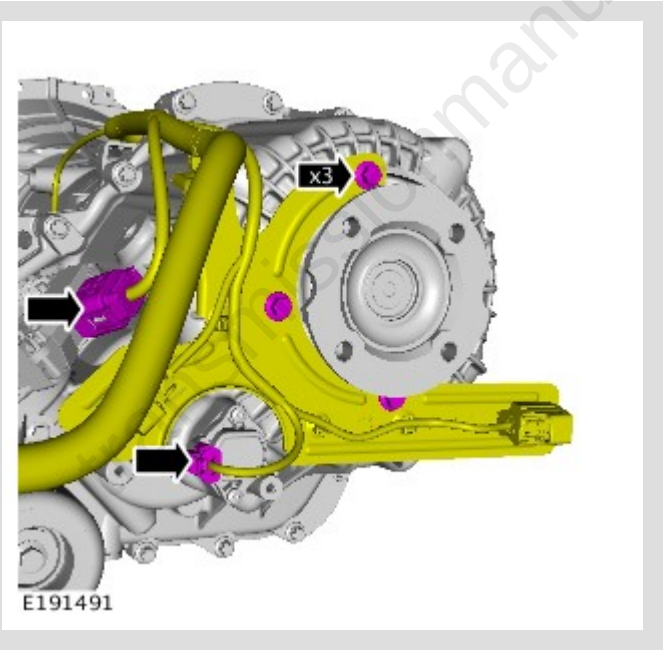

Torque: **25 Nm**

All vehicles

1.

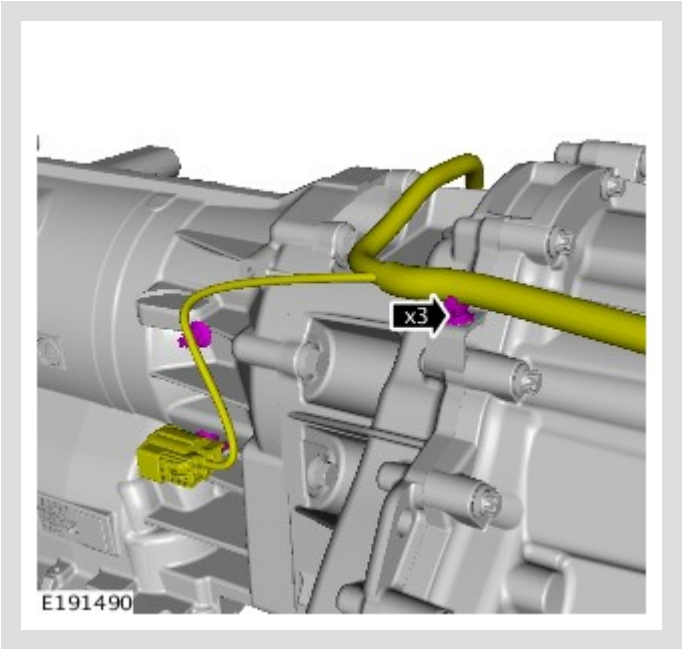

2.

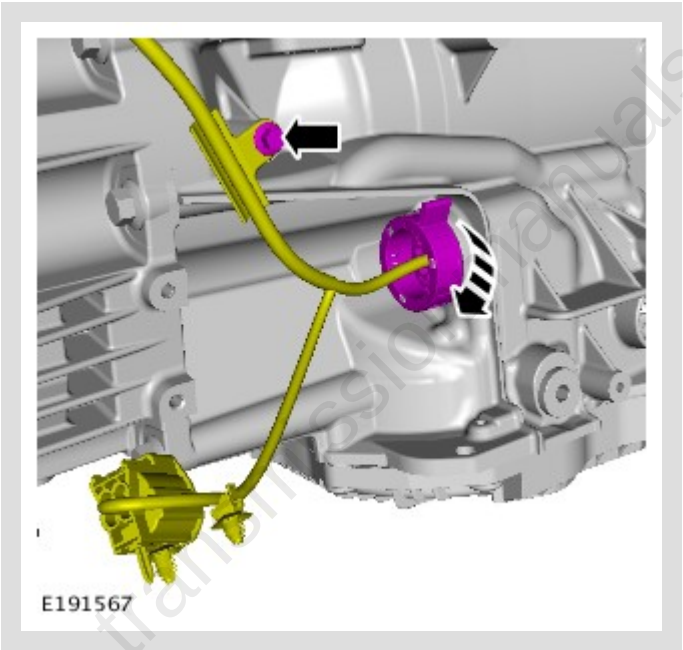

Torque: **10 Nm**

transmissionmanuals.com

3.

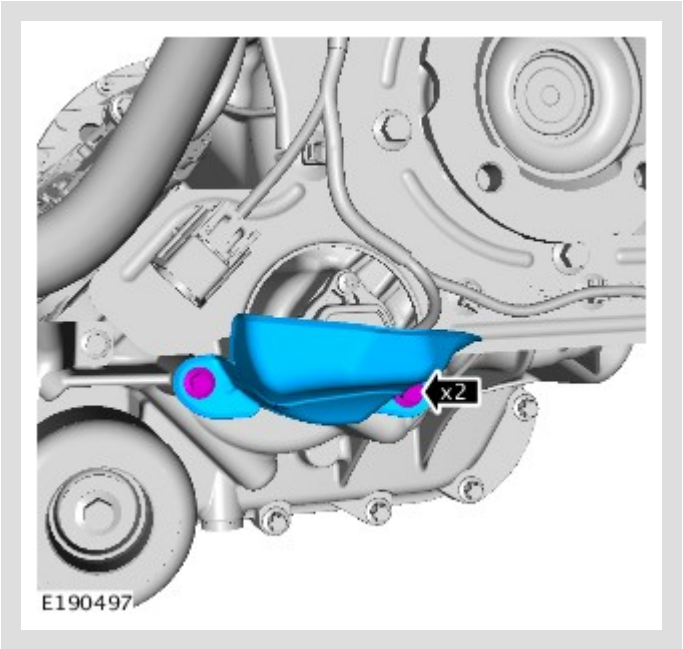

Torque: **8 Nm**

transmissionmanuals.com

4.

CAUTION:

Before disconnecting any components, make sure the area is clean and free from foreign material. When disconnected all openings must be sealed.

NOTE:

This step is only required if previously removed.

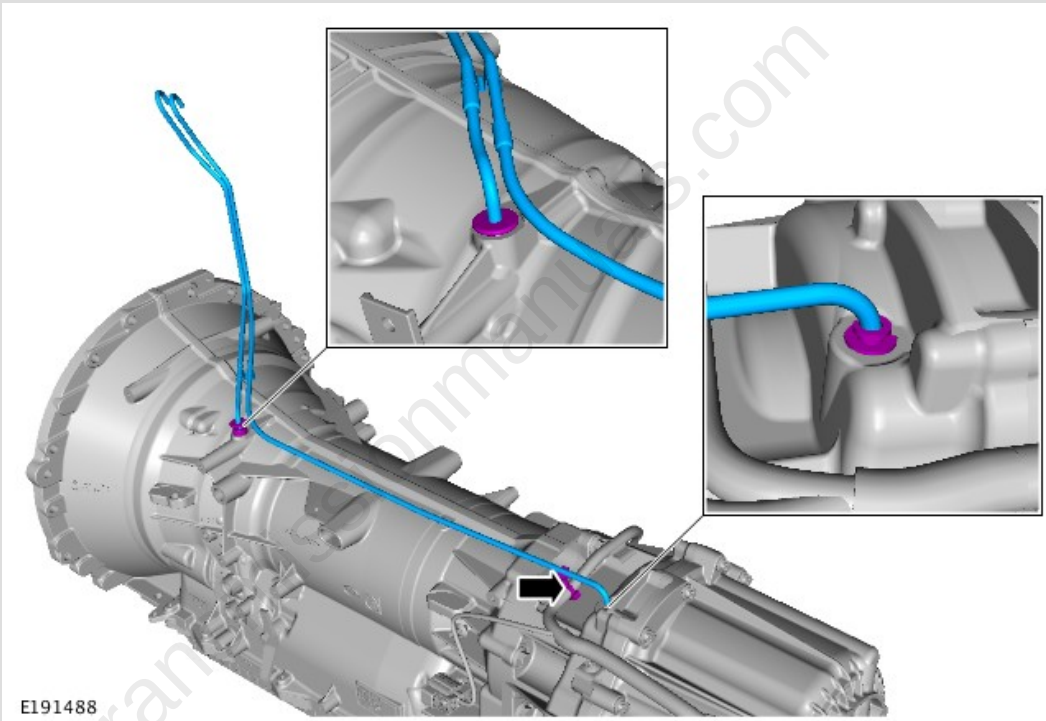

5.

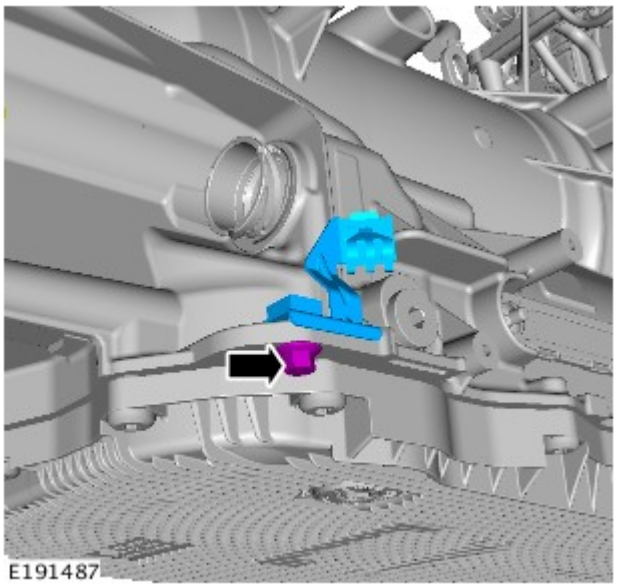

Torque: **18 Nm**

6.

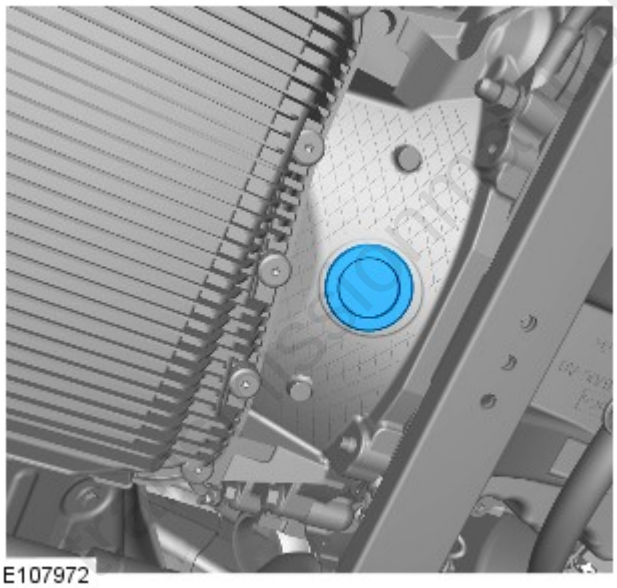

7.

WARNING:

Make sure that the transmission is secured with suitable retaining straps.

CAUTION:

Make sure that the torque converter remains in the transmission.

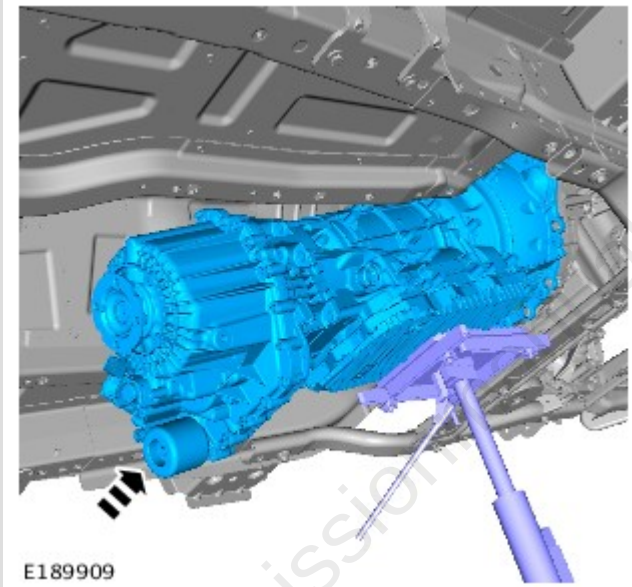

8.

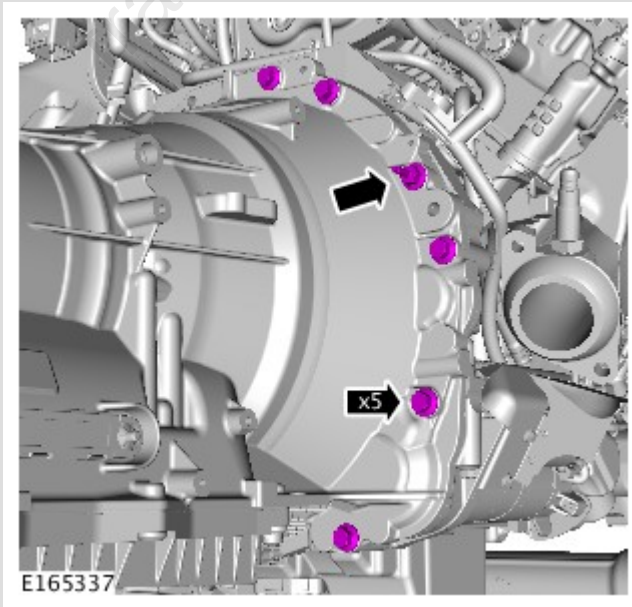

Torque: **40 Nm**

9.

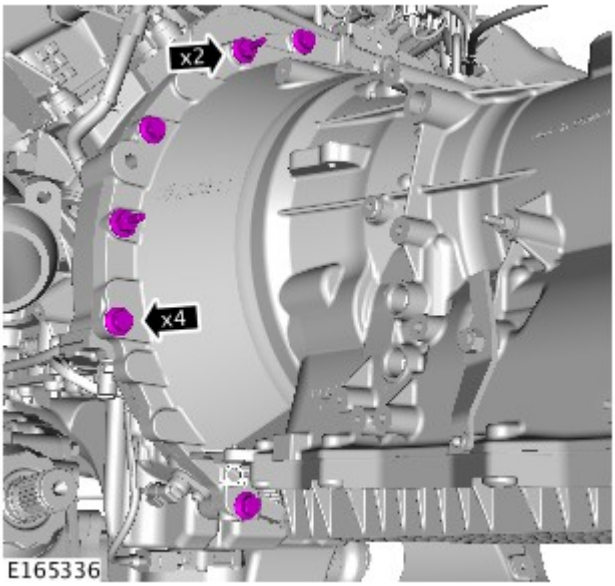

Torque: 40 Nm

10.

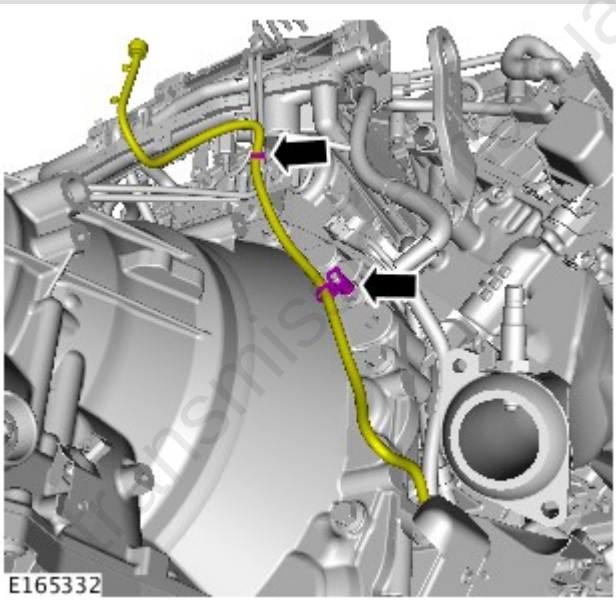

11.

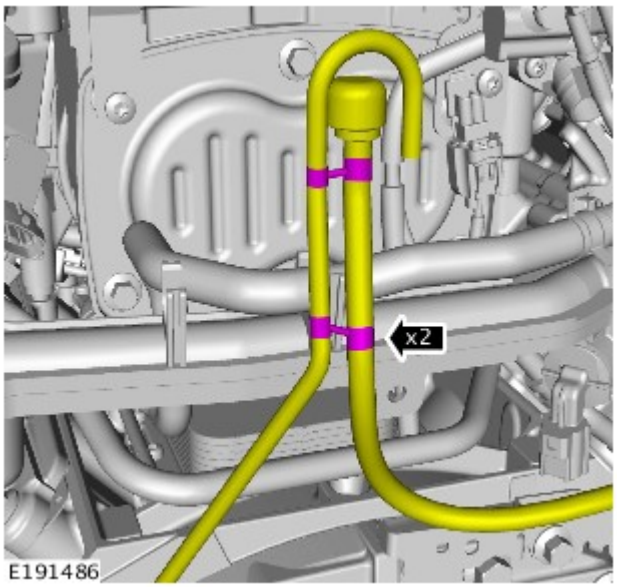

12.

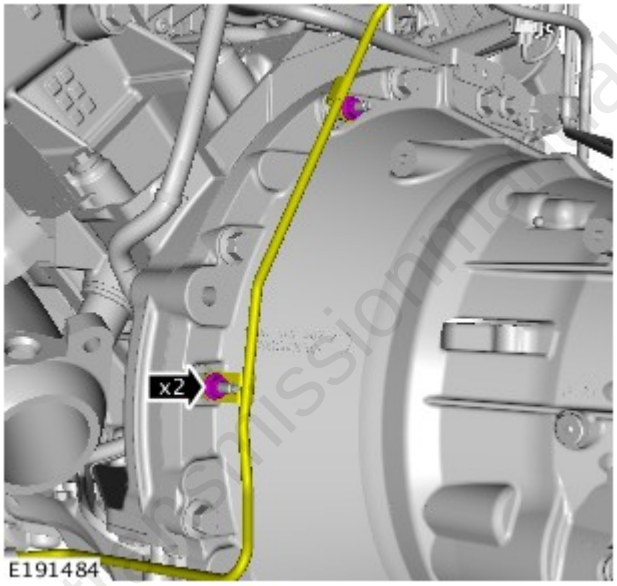

Torque: **18 Nm**

transmissionmanuals.com

13.

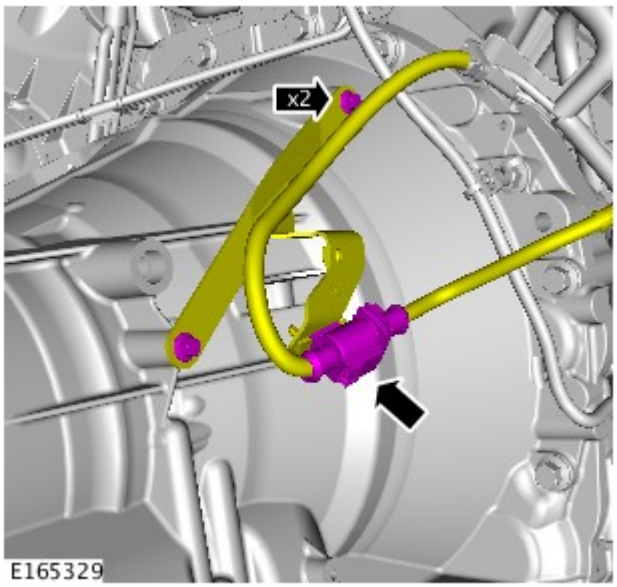

Torque: **18 Nm**

14.

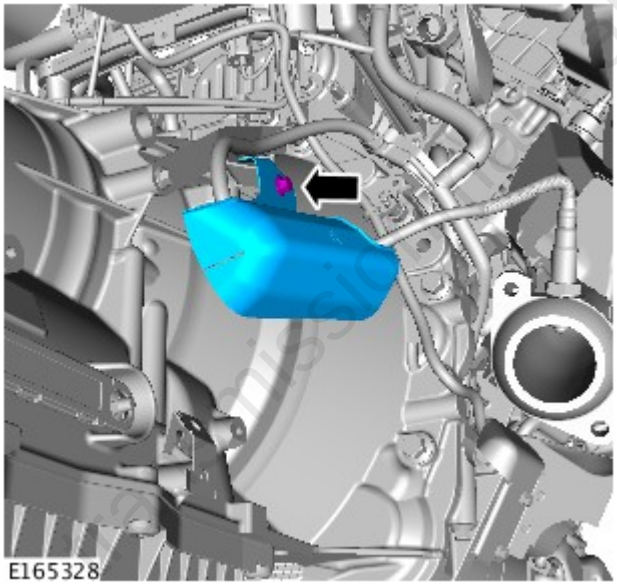

Torque: **10 Nm**

15.

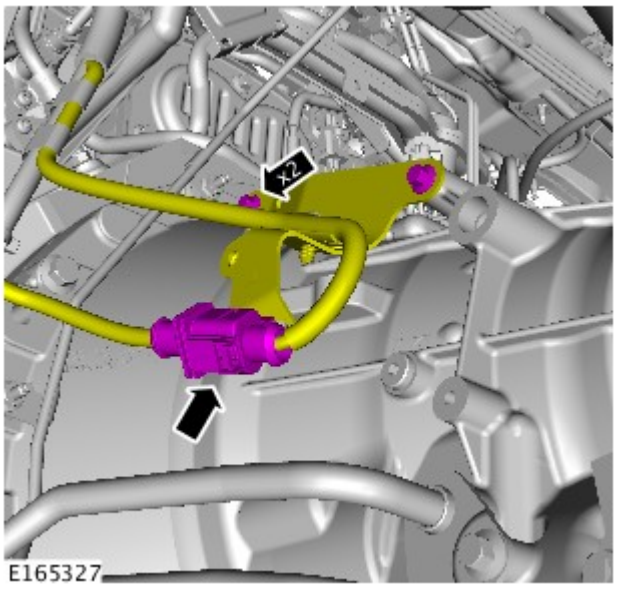

Torque: **18 Nm**

16.

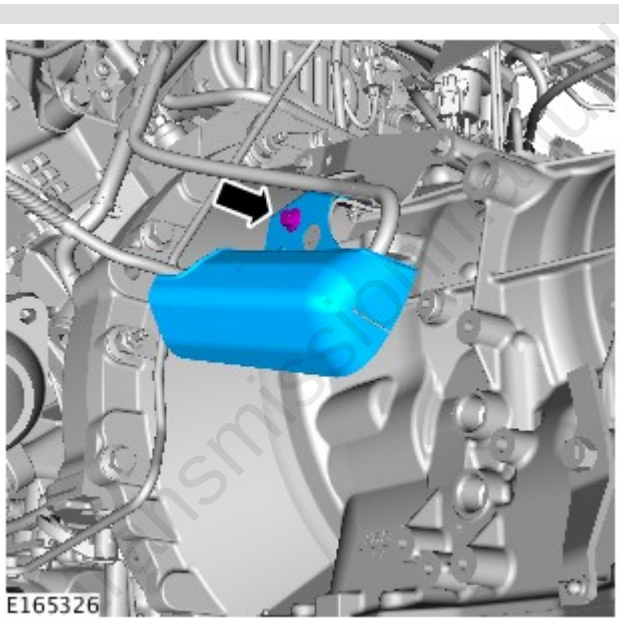

Torque: **10 Nm**

17.

NOTE:

If necessary, install new clips.

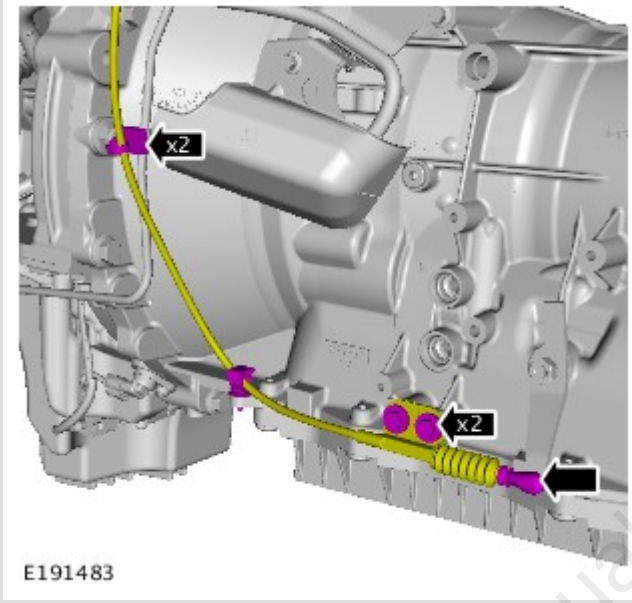

Torque: **11 Nm**

18.

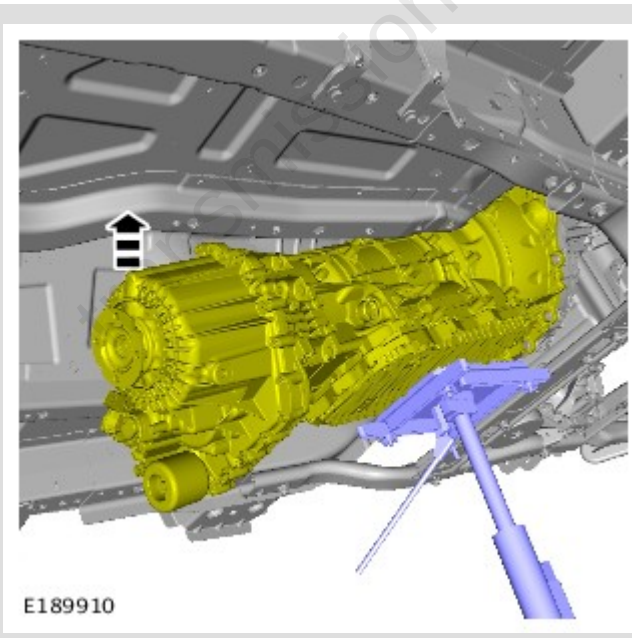

Raise the rear end of the transmission.

automotionmanuals.com

19.

CAUTION:

Only rotate the crankshaft clockwise.

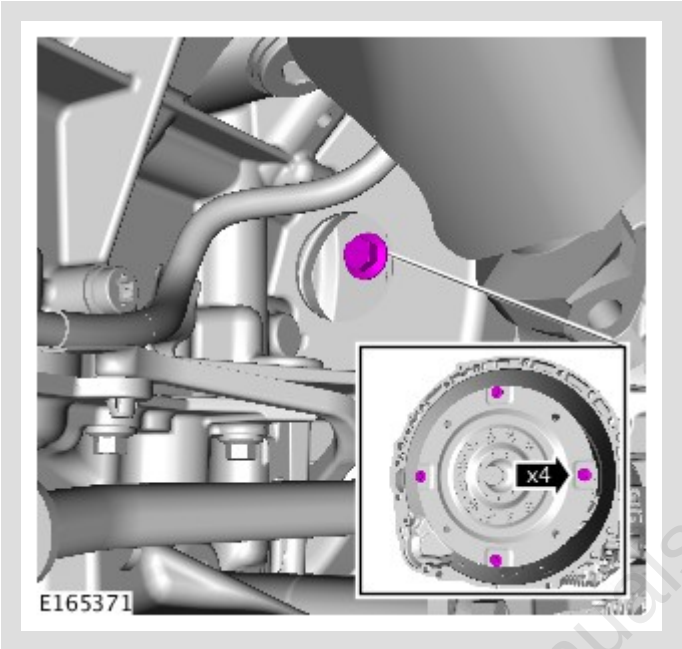

Renew Part: *Torque converter bolts* *Quantity:* *1* .
Torque: **70 Nm**

20.

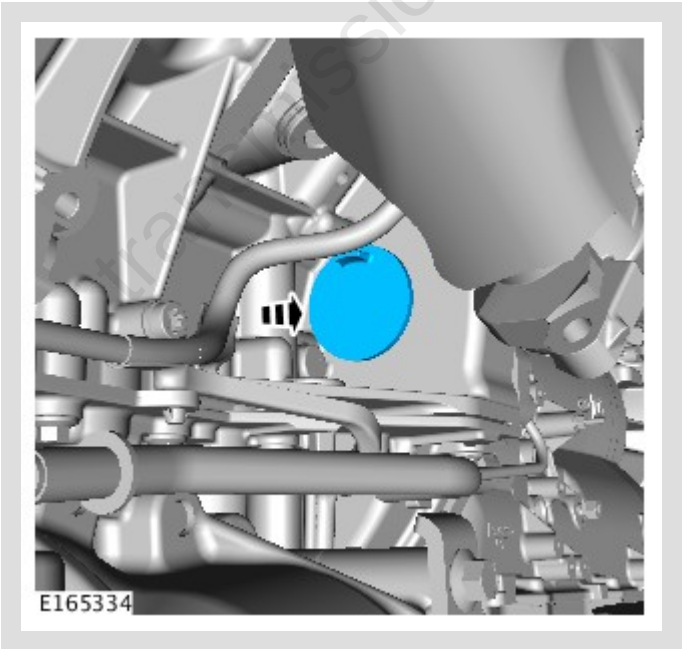

21.

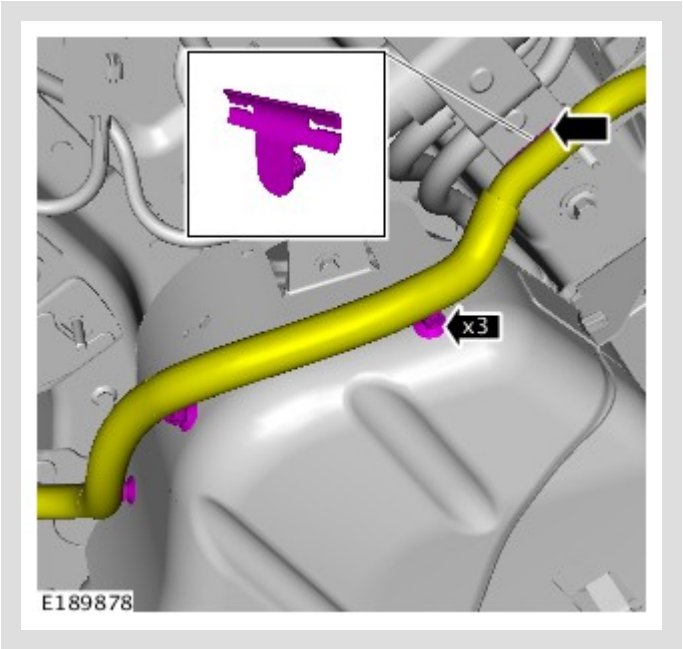

22.

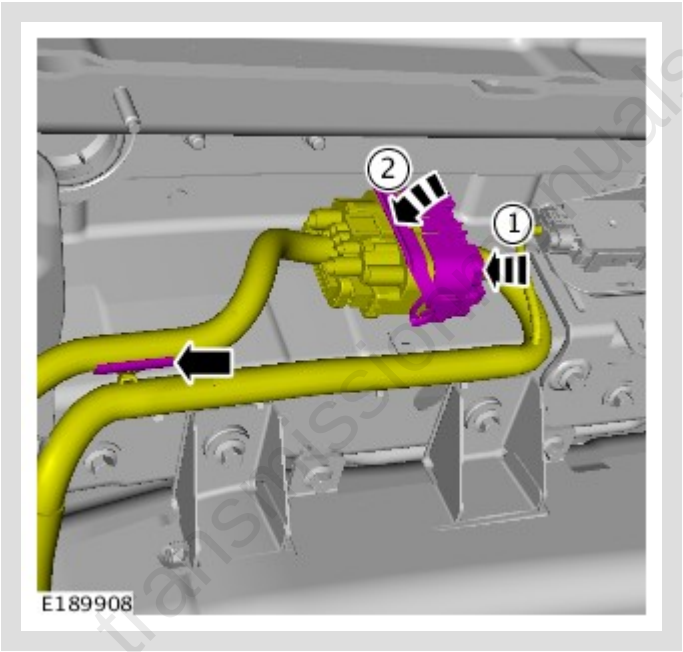

transmissionmanuals.com

23.

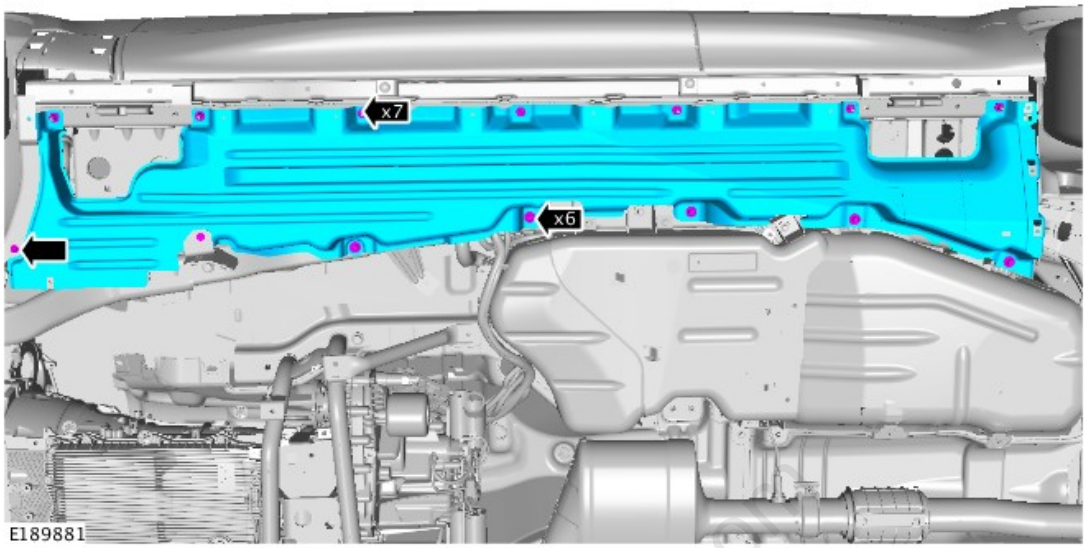

24.

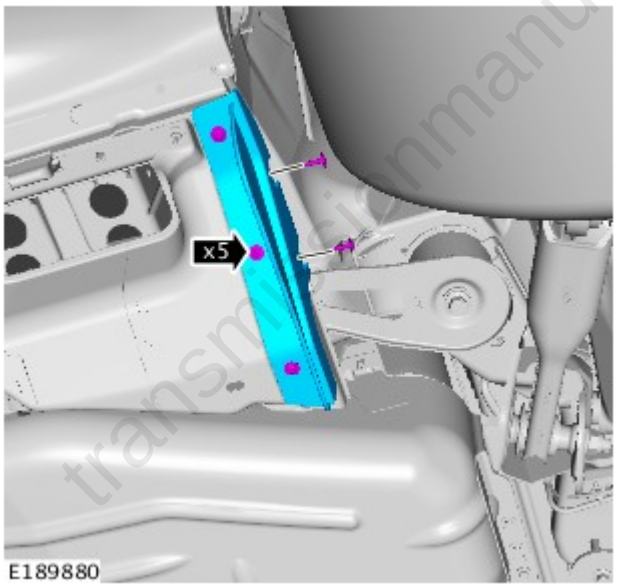

transmissionmanuals.com

25.

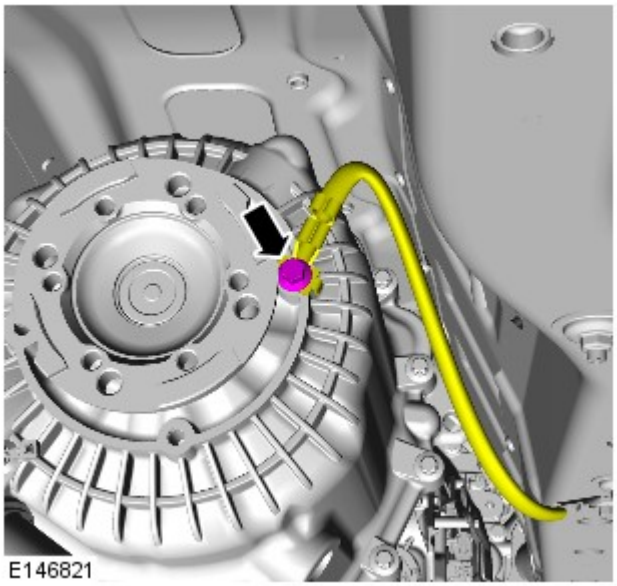

Torque: **25 Nm**

26.

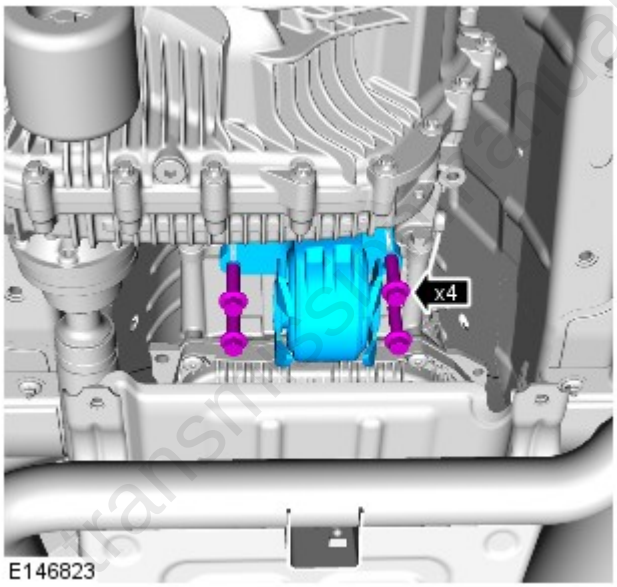

Torque: **60 Nm**

27. Install the transmission support crossmember.
Refer to: Transmission Support Crossmember - V6 S/C 3.0L Petrol (502-02 Full Frame and Body Mounting, Removal and Installation).

28.

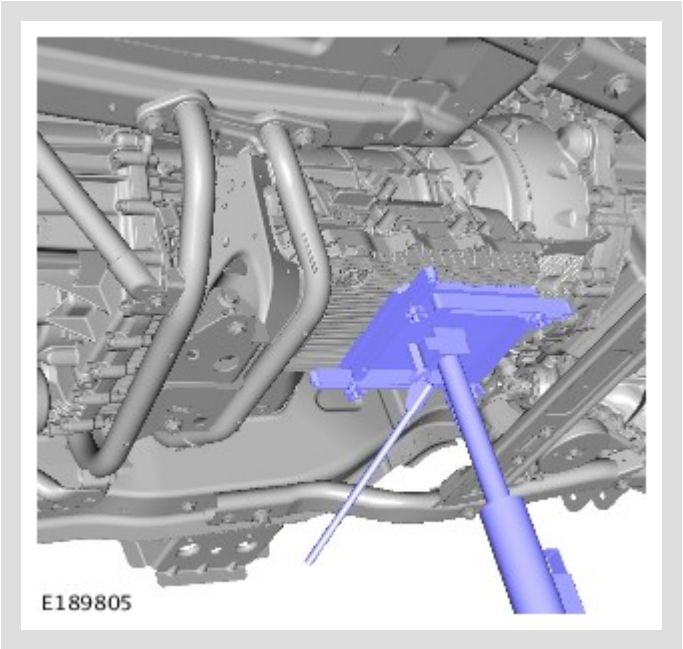

Remove the jack supporting the transmission.

transmissionmanuals.com

29.

WARNING:

Be prepared to collect escaping fluid.

CAUTION:

Install new o-ring seals

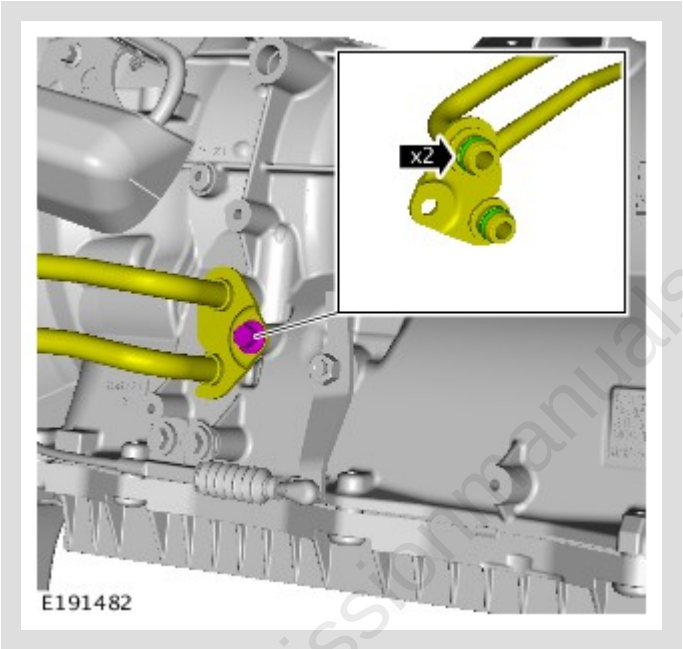

Renew Part: *Oil cooler O-ring seals* *Quantity:* *1* .
Torque: 22 Nm

transmissionmanuals.com

30.

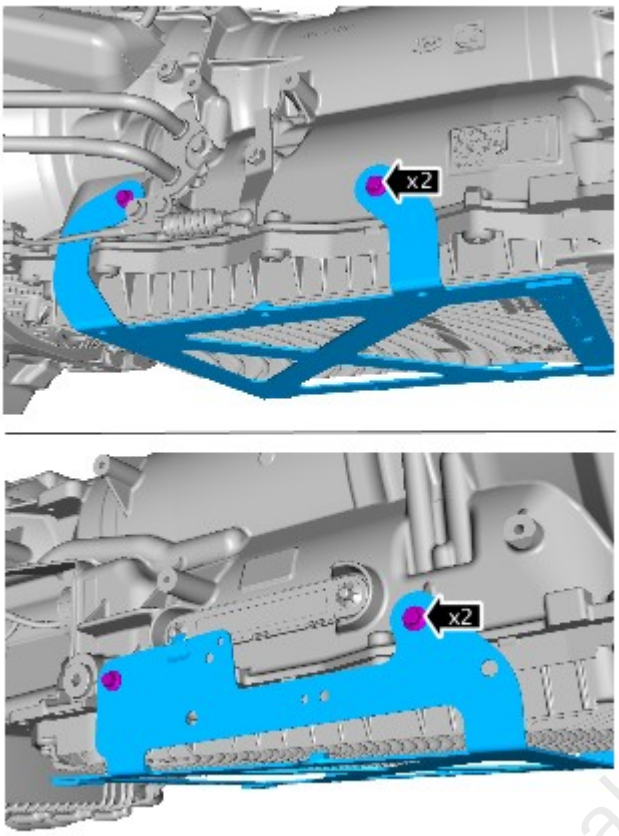

Torque: **9 Nm**

31. Install the rear driveshaft.
Refer to: Rear Driveshaft - V6 S/C 3.0L Petrol (205-01 Driveshaft, Removal and Installation).

32. Install the front driveshaft.
Refer to: Front Driveshaft - V6 S/C 3.0L Petrol (205-01 Driveshaft, Removal and Installation).

33. Install the starter motor.
Refer to: Starter Motor (303-06 Starting System - V6 S/C 3.0L Petrol, Removal and Installation).

34. Lower the vehicle.

transmissionmanuals.com

35.

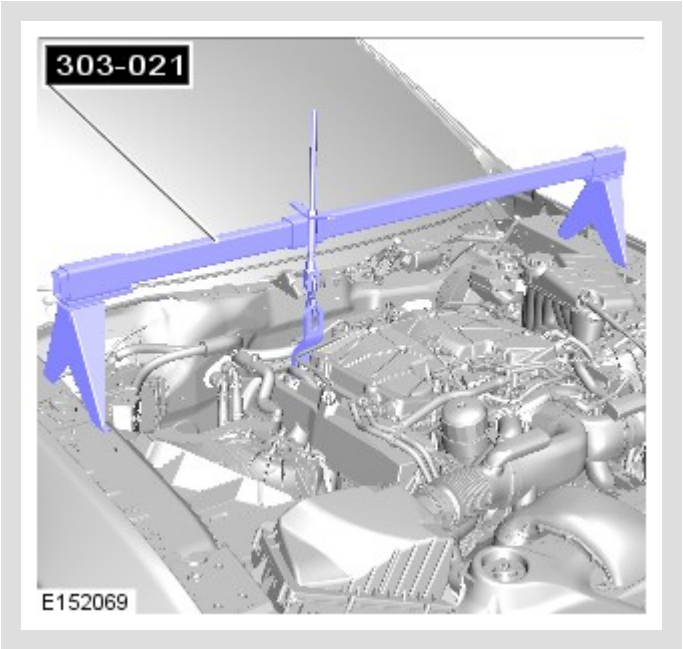

Special Tool(s): 303-021

36.

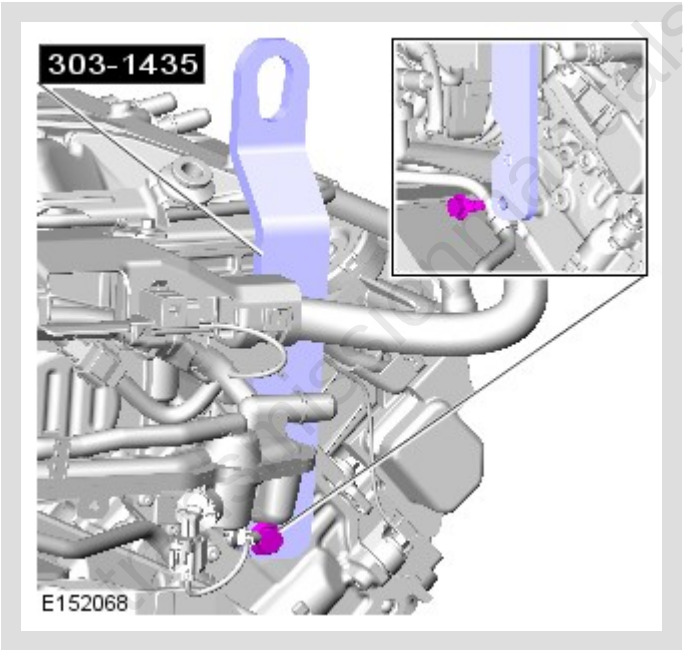

Special Tool(s): 303-1435

Torque: **40 Nm**

37.

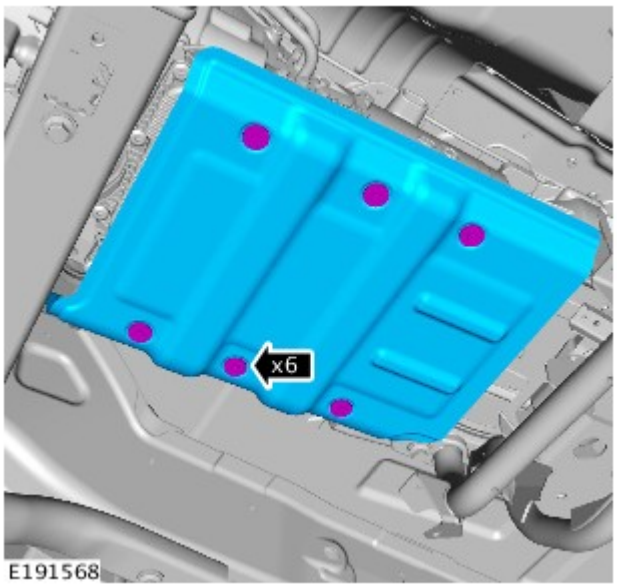

Torque: **9 Nm**

38.

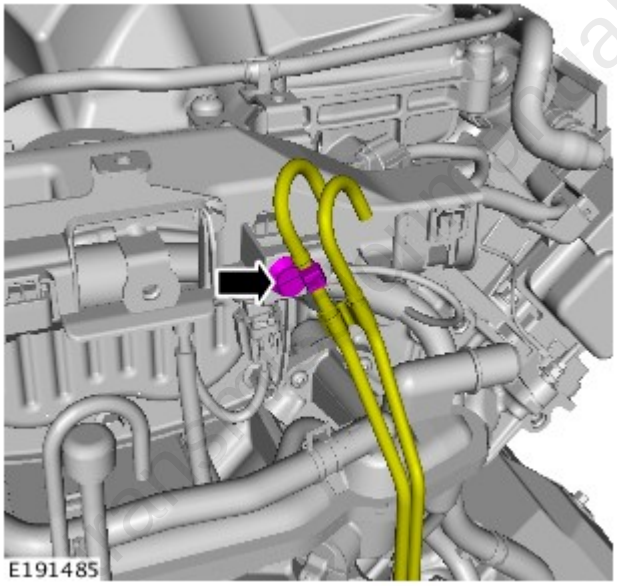

39. Install the secondary bulkhead center panel.
Refer to: Secondary Bulkhead Centre Panel - V6 S/C 3.0L Petrol (501-02 Front End Body Panels, Removal and Installation).

40. Connect the battery ground cable.
Refer to: Specifications (414-00 Battery and Charging System - General Information, Specifications).

41. Check the transmission fluid level.
Refer to: Transmission Fluid Level Check - V6 S/C 3.0L Petrol (307-01 Automatic Transmission/Transaxle - Vehicles With: 8HP45 8-Speed Automatic Transmission AWD, General Procedures).

transmissionmanuals.com